Translated from Chinese (Simplified) to English - www.onlinedoctranslator.com

Product Instruction Manual

Product type: Character typeLCDLCD display module

Product Model:0802A-14

client: _____

Customer ID: _____

date: _____

Confirmed (stamped)

Manufacturer	client

Head record

1. Revision History

2Overview

3External dimensions

4Hardware block diagram

5Electrical characteristics

6Interface Description

7Instruction Description

8Operation sequence description

9Application routines

10Precautions

1.Revision history

Version	issue date	New/Revised Content
V1.0	2020-08-12	New system

Note: Upgraded versions are backward compatible. No further notice will be given.

2.Overview

0802A-14A character-type LCD module is a dot-matrix LCD module specifically designed for displaying letters, numbers, symbols, etc. 4Position and8Bit data transmission method. Provided5×7A dot-matrix + cursor display mode. Provides a display data buffer.DDRAMCharacter generatorCGROMCharacter generatorCGRAMIt can be usedCGRAMTo store the maximum number of self-defined values8indivual5×8The font data for dot-matrix graphic characters. It provides rich instruction settings: clear display; return cursor to origin; display on/off; cursor on/off; character blinking; cursor shift; display shift elements, etc. It provides an internal power-on automatic reset circuit, which automatically initializes the module and sets it to the default display operating state when external power is applied.

Number of characters to display: 8 characters x 2 lines **Character dot matrix: 5x7 character matrix + cursor**

Display colors and backlight colors: STN: Blue, Yellow-Green, Gray; Backlight: Black, White, Yellow-Green

Polarizing film: Fully transparent/Semi-transparent

Observation angle:6:00

Display duty cycle:1/16Drive bias:1/5

Control chip:SPLC780Dor compatibleIC(likeAIP31066)

Character generatorROM (CGROM): 10880 bits (192 character 5*8 dots)or (64 characters, 5*11 dots)

Character generatorRAM (CGRAM): 64X8 bits (8 characters 5*8dots)or (4 characters 5*11dots)

Display dataRAM (DDRAM):80X8 bits (80 characters max)

size (Unit: mm)

External dimensions: 58.5 x 32.5 x 13.3 mm

Visible area:38X16 Character font:5x7 dots +cursor

Character size:27.44 x 11.49 Dot size:0.54 x 0.64

Character spacing:3.5X5.95

weight: **g** Contrast:V0External adjustment or internal fixed contrast

Operating voltage+3.3V or +5Vdefault5V

3.External dimensions:

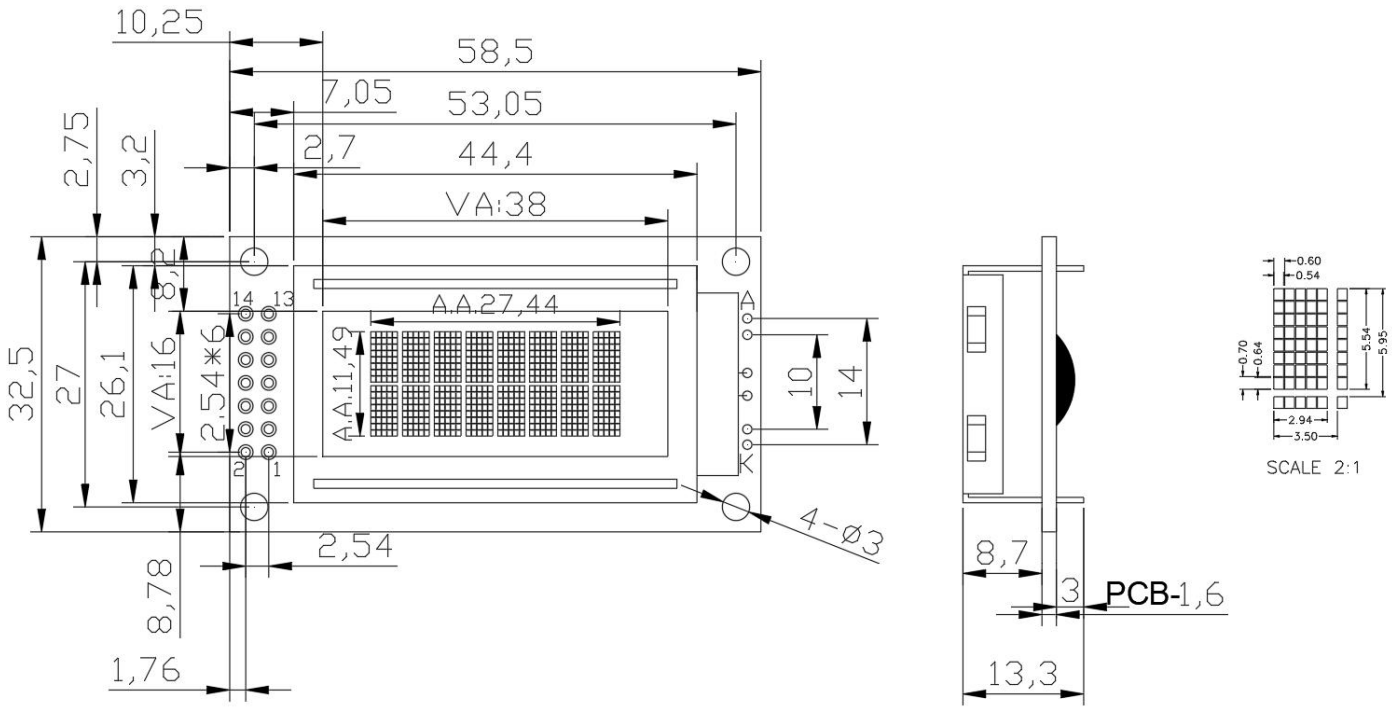

4.Hardware block diagram:

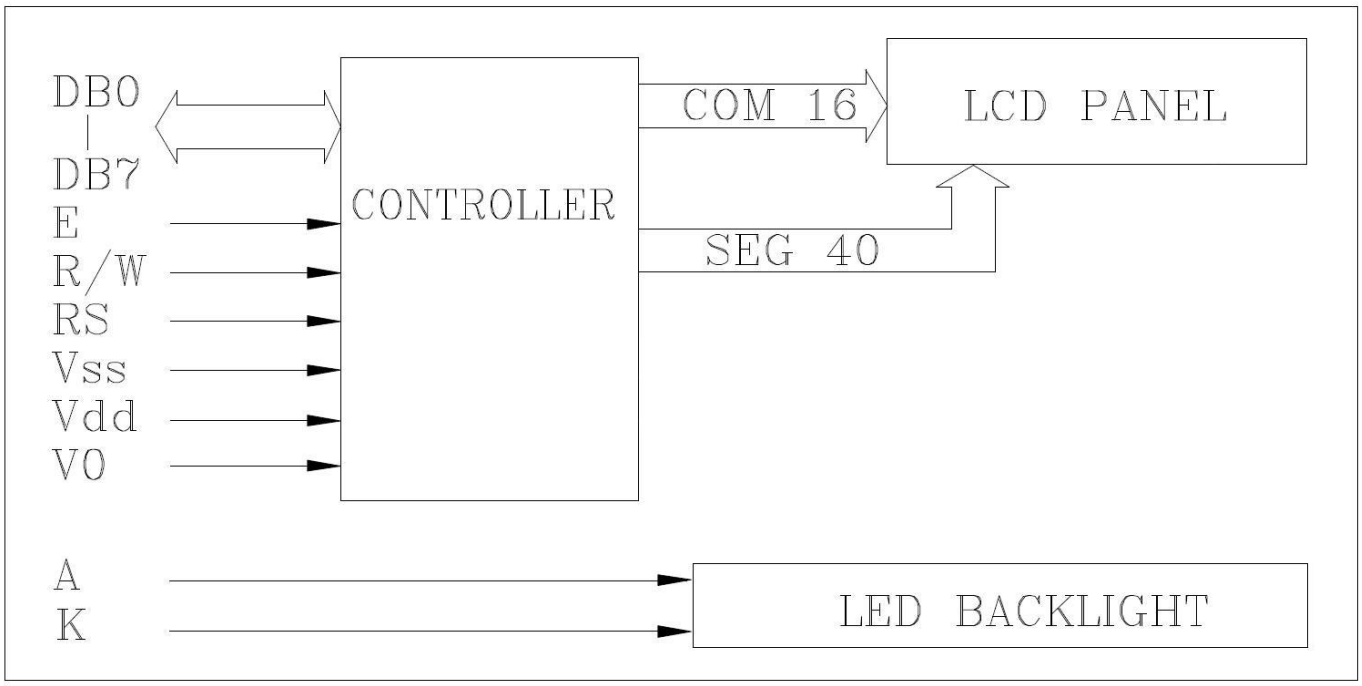

5.Electrical characteristics

5.1Limiting parameters

Parameter name	symbol	condition			unit
	Vdd		- 0.3	7.0	V
	V5		Vdd-10.0	Vdd+0.3	V
	Vi		- 0.3	Vdd+0.3	V
	Top	-	- 20	70	℃
Storage temperature (T)	Tstg	-	- 30	80	℃

5.2.1DC parameters1(Ta=25oC, Vdd = 4.5V~5.5V)

Parameter name	symbol	condition				unit
			Minimum	typical	maximum	
	Vdd-GND	-	4.5	5.0	5.5	V
	Idd	Vdd=5V	0.55	1.2	1.5	mA
	Iee		-	0.6	-	mA
	Vdd-V5		4.2	4.5	4.8	V
	If	Vf = 3.0~3.2V	17	18	20	mA
	Pd		90	100	110	mW
	Vih		2.5	-	Vdd	V
	Vil		- 0.3	-	0.6	V
	Voh	Ioh = -0.205mA	2.4	-	-	V
Output low level	Vol	Io1 = 1.2mA	-	-	0.4	V

5.2.2DC parameters2(Ta=25oC, Vdd = 2.7V~4.5V)

Parameter name	symbol	condition				unit
			Minimum	typical	maximum	
	Vdd-GND	-	2.7	3.3	4.5	V
	Idd	Vdd=3.3V	0.45	0.9	1.0	mA
	Iee		-	0.6	-	mA
	Vdd-V5		4.2	4.5	4.8	V
	If	Vf = 3.0~3.2V	17	18	20	mA
	Pd		55	60	66	mW
	Vih		0.7Vdd	-	Vdd	V
	Vil		- 0.3	-	0.55	V
	Voh	Ioh = -0.1mA	0.75Vdd	-	-	V
Output low level	Vol	Iol=0.1mA	-	-	0.2Vdd	V

5.3.1AC parameters1(Ta=25oC, Vdd = 4.5V~5.5V)

参 数名称	符号	测试条件	最小	典型	最大	单位
E周期	tc	写模式	500	-	-	ns
E上升/下降时间	t_R,t_F		-	-	20	
E脉冲宽度(1,0)	t_w		230	-	-	
R/W和RS建立时间	t_{su1}		40	-	-	
R/W和RS保持时间	t_{H1}		10	-	-	
数据建立时间	t_{su2}		80	-	-	
数据保持时间	t_{H2}		10	-	-	
E周期	t_c	读模式	500	-	-	ns
E上升/下降时间	t_R, t_F		-	-	20	
E脉冲宽度(1,0)	t_w		230	-	-	
R/W和RS建立时间	t_{su}		40	-	-	
R/W和RS保持时间	t_H		10	-	-	
数据输出延迟时间	t_D		-	-	120	
数据保持时间	t_{DH}		5	-	-	

5.3.2AC parameters2(Ta=25oC, Vdd = 2.7V~4.5V)

参 数名称	符号	测试条件	最小	典型	最大	单位
E周期	tc	写模式	1000	-	-	ns
E上升/下降时间	t_R,t_F		-	-	25	
E脉冲宽度(1,0)	t_w		450	-	-	
R/W和RS建立时间	t_{su1}		60	-	-	
R/W和RS保持时间	t_{H1}		20	-	-	
数据建立时间	t_{su2}		195	-	-	
数据保持时间	t_{H2}		10	-	-	
E周期	t_c	读模式	1000	-	-	ns
E上升/下降时间	t_R, t_F		-	-	25	
E脉冲宽度(1,0)	t_w		450	-	-	
R/W和RS建立时间	t_{su}		60	-	-	
R/W和RS保持时间	t_H		20	-	-	
数据输出延迟时间	t_D		-	-	360	
数据保持时间	t_{DH}		5	-	-	

AC test waveform diagram

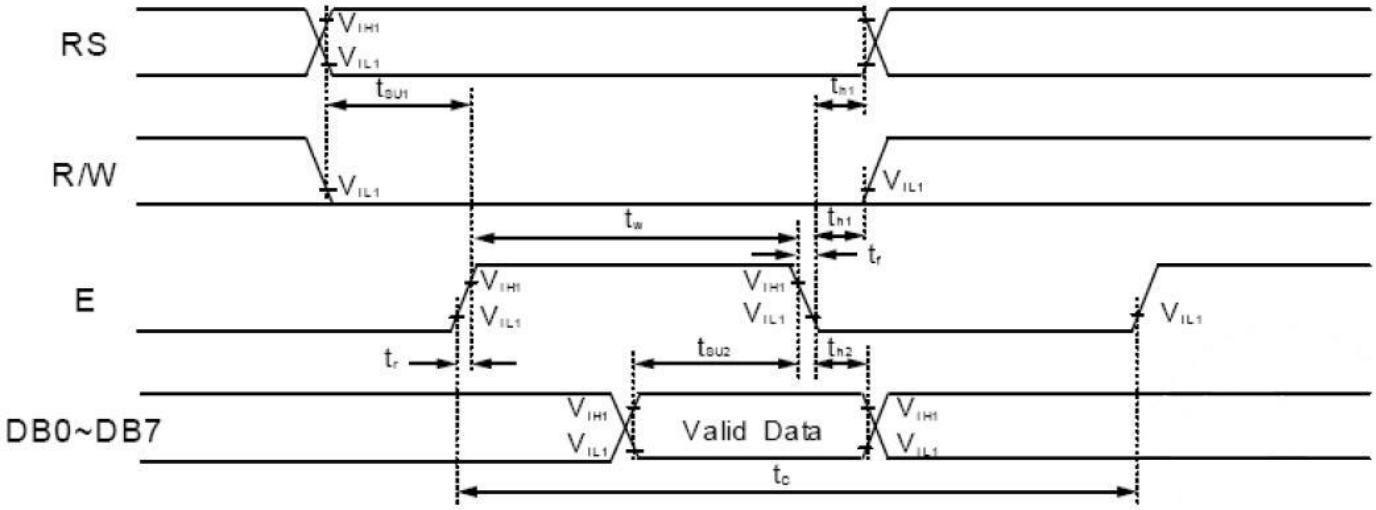

Write mode

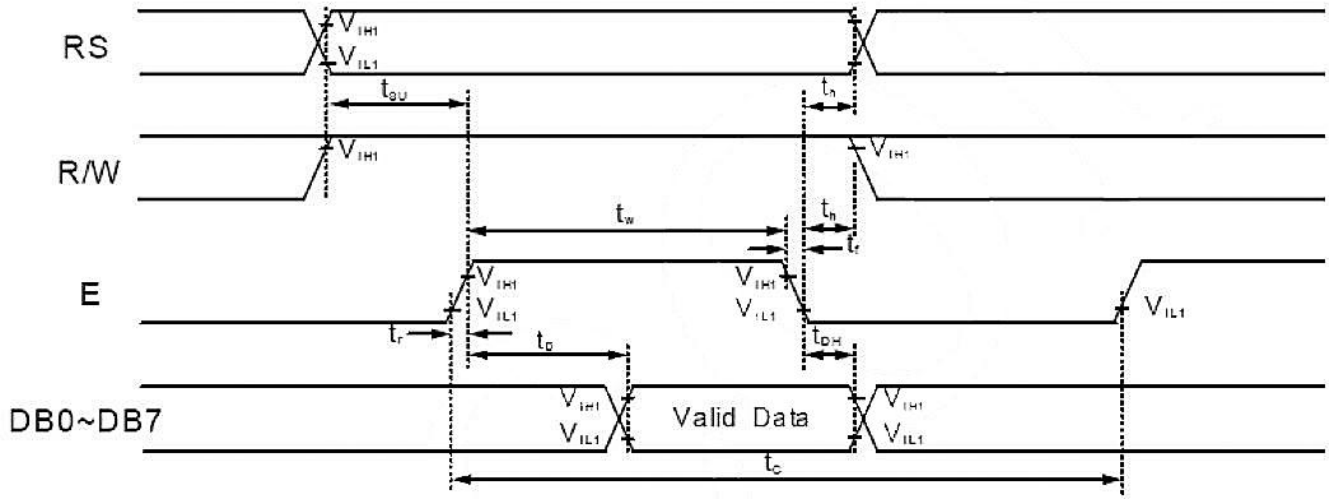

Reading mode

6.Interface Description

1	Vss	power supply	0V	
2	Vdd		+5V	
3	Vo			
4	RS			
5	R/W			
6	E			
7	DB0			
8	DB1			
9	DB2			
10	DB3			
11	DB4			
12	DB5			
13	DB6			
14	DB7	Data bits7		

7.Instruction Description

The module has4Bit/8BitMCUParallel communication mode,4Bit/8The bit bus passes through the instruction register.DLBits are selected. During read/write operations, the following is used:2indivual8One is a bit register, and the other is a data register.DRThe other is the instruction register.IRData registerDRAs for writing and readingDDRAM/CGRAMTemporary storage location for data, targetRAMpassRAMThe address is selected using the address setting command, allowing for any read/write operations.RAMThe internal operations are all completed automatically, whenMCURead aloudDRInternal data,DDRAM/CGRAM Data is automatically transmitted toDRSimilarly, whenMCUWrite data toDR,DRData is automatically transmitted outDDRAM/CGRAMInstruction RegisterIRUsed to store fromMCUInstruction code,MCUIf you cannot read the instruction data, you can do so by...RSPin switching selects the register.

By settingRS/RWBit operations:

RS	RW	operate
L	L	Write instruction operation (MCUWrite instruction code toIR)
L	H	Read the busy sign (DB7) and address counter (DB0~DB6)
H	L	Write data operation (MCUWrite data toDR)
H	H	Read data operation (MCUfromDRRead the data)

7.1Busy sign (BF)

BFA high value indicates that internal operations are in progress, so the next instruction cannot be executed during this period.RS="0"andR/W="1" (When reading instructions)BFThe value can be obtained fromDB7The message is read aloud, and confirmation is required before executing the next instruction. BFNot for "1".

7.2Address counter (AC)

From the instruction registerDDRAM/CGRAMWhen the address is stored in the address counter, the data in the address counter is being written.

Input or outputDDRAM/CGRAMIncremental or decremental, whenRS="0"andR/W="1"At that time, the data in the address counter can be obtained fromDB0~DB6Read it aloud.

7.3Display dataRAM(DDRAM)

ModuleDDRAMThe address range is00H~27Hand40H~67H.

7.4Character generationROM(CGROM)

Character generationROMhave5X8lattice,192Characters, and5x11lattice,64character mode

7.5Character generationRAM(CGRAM)

Character generationRAMhave5*8lattice,8Each character space consists of [number] character spaces.8indivual5Composed of bit-byte space, it allows for the writing of custom character data to...CGRAM,this8The user can write to the character space.DDRAMdata00H~07HTo call custom characters.

DDRAM/CGRAMAddress mapping diagram:

Character Code (DDRAM data)								CGRAM address						CGRAM Data								Pattern number
D7	D6	D5	D4	D3	D2	D1	D0	A5	A4	A3	A2	A1	A0	P7	P6	P5	P4	P3	P2	P1	P0	
0	0	0	0	×	0	0	0	0	0	0	0	0	0	×	×	×	0	1	1	1	0	pattern1
											0	0	1				0	0	1	0	0	
											0	1	0				0	0	1	0	0	
											0	1	1				0	0	1	0	0	
											1	0	0				0	0	1	0	0	
											1	0	1				0	0	1	0	0	
											1	1	0				0	1	1	1	0	
											1	1	1				0	0	0	0	0	
0	0	0	0	×	0	0	1	0	0	1	0	0	0	×	×	×	0	1	1	1	0	pattern2
											0	0	1				1	0	0	0	1	
											0	1	0				1	0	0	0	0	
											0	1	1				1	0	0	0	0	
											1	0	0				1	0	0	0	0	
											1	0	1				1	0	0	0	1	
											1	1	0				0	1	1	1	0	
											1	1	1				0	0	0	0	0	
			*						*						*							
			*						*						*							
			*						*						*							
			*						*						*							
0	0	0	0	×	1	1	1	1	1	1	0	0	0	×	×	×	1	1	1	1	1	pattern8
											0	0	1				1	0	0	0	0	
											0	1	0				1	0	0	0	0	
											0	1	1				1	1	1	1	0	
											1	0	0				1	0	0	0	0	
											1	0	1				1	0	0	0	1	
											1	1	0				1	1	1	1	0	
											1	1	1				0	0	0	0	0	

7.6Instruction Description

Instruction list

instruction	RS	R/W	DB7	DB6	DB5	DB4	DB3	DB2	DB1	DB0	Execution time	describe
Clear show	0	0	0	0	0	0	0	0	0	1	1.53ms	Will20HWriteDDRAMSet the address counter address to00H
return	0	0	0	0	0	0	0	0	1	-	1.53ms	Set the address counter address to00H,and Return the cursor to its initial position. DDRAMContent remains unchanged
Input mode Style settings	0	0	0	0	0	0	0	1	I/D	SH	39us	Set the cursor movement direction and allow the entire Show movement
show switch	0	0	0	0	0	0	1	D	C	B	39us	Settings include display, cursor, and cursor blinking control. System
shift	0	0	0	0	0	1	S/C	R/L	-	-	39us	Set cursor movement and display movement direction. Control bit,DDRAMThe data remains unchanged
Function set up	0	0	0	0	1	DL	N	F	-	-	39us	Set the interface data width (DL:8Bit/4 (digits), display row number ()N:2OK/1(line), display font ()F:5x11lattice/5x8lattice)
set up CGRAM address	0	0	0	1	AC5	AC4	AC3	AC2	AC1	AC0	39us	Set within the address counterCGRAMaddress
set up DDRAM address	0	0	1	AC6	AC5	AC4	AC3	AC2	AC1	AC0	39us	Set within the address counterDDRAMland site
Busy reading Logo & address	0	1	BF	AC6	AC5	AC4	AC3	AC2	AC1	AC0	0us	Read busy flagBFIn the address counter The content is read out simultaneously
Write data	1	0	D7	D6	D5	D4	D3	D2	D1	D0	43us	Write data to internalRAM (DDRAM/CGRAM)
Read data	1	1	D7	D6	D5	D4	D3	D2	D1	D0	43us	From the insideRAM (DDRAM/CGRAM) Reading data

Note: "-" indicates that it is not considered.

7.6.1Clear display

RS	R/W	DB7	DB6	DB5	DB4	DB3	DB2	DB1	DB0
0	0	0	0	0	0	0	0	0	1

By writing20H(space code) to allDDRAMAddress and set address counter are00H,You can clear the displayed data, place the cursor in the initial position, and set the input mode to increment.I/D(For high).

7.6.2return

RS	R/W	DB7	DB6	DB5	DB4	DB3	DB2	DB1	DB0
0	0	0	0	0	0	0	0	1	-

"-"To avoid taking the exam consider

The return command returns the cursor to its starting position.DDRAMThe address is set to00HWrite to the address counter and reset the display to its initial state.DDRAMThe data remains unchanged.

7.6.3Input mode

RS	R/W	DB7	DB6	DB5	DB4	DB3	DB2	DB1	DB0
0	0	0	0	0	0	0	0	1	I/D	SH

Set the cursor and display movement direction.

I/D:DDRAMIncrementing or decrementing the address (cursor or blinking)

whenI/Dfor1At that moment, the cursor blinks and moves to the right.DDRAMThe address is incremented; whenI/Dfor0At that moment, the cursor blinks and moves to the left.DDRAM The address decreases as read or write operations occur.CGRAMAt that time, the mode of movement andDDRAMConsistent. SHDisplay shift

whenSHfor0At that time,DDRAMorCGRAMDuring read and write operations, the entire display remains stationary.SHfor1At that time,DDRAM During a write operation, the entire display will be shifted according to...I/DDisplacement in the set direction.

7.6.4Display switch control

RS	R/W	DB7	DB6	DB5	DB4	DB3	DB2	DB1	DB0
0	0	0	0	0	0	0	1	D	C	B

Display/cursor and blinking control

DDisplay switch control position

whenDfor1When, the display is on; whenDfor0At that time, the display was closed, butDDRAMThe displayed data remains unchanged. C Cursor switch control bit

whenCfor1When, the cursor is on; whenCfor0At that moment, the cursor disappeared, butI/DThe register stores its data. B: Cursor blinking switch control bit

whenBfor1At that time, the cursor blinked.Bfor0When the cursor blinks, it turns off.

7.6.5Cursor blinking/shifting

RS	R/W	DB7	DB6	DB5	DB4	DB3	DB2	DB1	DB0
0	0	0	0	0	0	1	S/C	R/L	-	-

This command, which does not read or write displayed data, moves the cursor position or display left or right. It is used to correct and locate displayed data.2In row display mode, at the first1The first line40After the first character, the cursor moves to the second character.2Columns. Note that in all columns, the display shift occurs simultaneously. When the display data is repeatedly shifted, each bit is shifted independently. During the display shift, the contents of the address counter remain unchanged.

Shift Format Table

S/C	R/L	operate
0	0	As the cursor moves to the left, the address counter decreases.1
0	1	As the cursor moves to the right, the address counter increments.1
1	0	Therefore, the display moves to the left, and the cursor follows the display's movement.
1	1	All displays move to the right, and the cursor follows the display's movement.

7.6.6Function settings

RS	R/W	DB7	DB6	DB5	DB4	DB3	DB2	DB1	DB0
0	0	0	0	0	1	DL	N	F	-	-

DLInterface data width control bit

whenDLfor1When, it means8Bit bus connected toMCU

whenDLfor0When, it means4Bit bus connected toMCU, should be4In bit bus mode8Bit data needs to be transmitted4Bit data2 Completed in one go.

NDisplay row number control bit

whenNfor0At that time,1Row display mode; whenNfor1At that time,2Row display mode. FDisplay font settings

whenFfor0At that time, the font was5x8Dot matrix mode; whenFfor1At that time, the font was5x11Dot matrix mode.

7.6.7set upCGRAMaddress

RS	R/W	DB7	DB6	DB5	DB4	DB3	DB2	DB1	DB0
0	0	0	1	AC5	AC4	AC3	AC2	AC1	AC0

WillCGRAMThe address is loaded into the address counter, so that the address comes fromMCUofCGRAMThe data is valid.

7.6.8set upDDRAMaddress

RS	R/W	DB7	DB6	DB5	DB4	DB3	DB2	DB1	DB0
0	0	1	AC6	AC5	AC4	AC3	AC2	AC1	AC0

WillDDRAMThe address is loaded into the address counter, so that the address comes fromMCUofDDRAMThe data is valid, when1In row display mode, DDRAMaddress00H~4FH;when2In row display mode, the first row1OKDDRAMAddress from00H~27H, No.2OKDDRAMAddress from 40H~67H.

7.6.9Read busy indicator and address

RS	R/W	DB7	DB6	DB5	DB4	DB3	DB2	DB1	DB0
0	1	BF	AC6	AC5	AC4	AC3	AC2	AC1	AC0

This instruction indicates whether the module is currently in operation.BFfor1Internal work is underway; please wait until... BFPlaced0 Only when the next instruction is executed can the value in the address counter be read.

7.6.10Write data toRAM

RS	R/W	DB7	DB6	DB5	DB4	DB3	DB2	DB1	DB0
1	0	D7	D6	D5	D4	D3	D2	D1	D0

Write8Bit data toDDRAM/CGRAM.DDRAMandCGRAMThe selection between them is determined by the address setting instruction.DD RAMAddress setting instructions andCGRAMAddress setting command), the address will be set according to the write operation.RAMThe setting instruction determines whether the address counter increments or decrements.

7.6.11fromRAMRead data

RS	R/W	DB7	DB6	DB5	DB4	DB3	DB2	DB1	DB0
1	1	D7	D6	D5	D4	D3	D2	D1	D0

fromDDRAM/CGRAMRead from8Bit data,DDRAMandCGRAMThe choice between the two is determined by the address setting instruction. If no address setting instruction is written before reading data, the read data is invalid; if no address setting instruction is written before the read operation...RAMIf an address setting instruction is executed and multiple data entries are read, then entries starting from the second entry are valid; the first entry is incorrect because there is no timing coordination.RAMData output, inDDRAMIn read operations, the cursor transfer instruction plays a crucial role.DDRAMThe address setting command has the same effect, and will...RAMData is sent to the output register. After a read operation, the address counter increments or decrements according to the input mode instruction.CGRAM After a read operation, the shift operation may not be executed correctly.

7.6.12initialization

When powered on, the module will initialize, and the following instructions will be executed during this process. The busy flag will remain high until the initialization is complete.

1.Clear display command: AllDDRAMWritten20H

2.Setting function commands:DL=1,8Bit bus mode

N=0,1Row display mode

F=0,5x8Font

3.Display on/off commands:D=0Display off

C=0cursor off

B=0Flashing off

4.Set return command:I/D=1Increasing

SH=0Display without shifting

7.7Display location andRAMAddress Map

Display location	1-1	1-2	1-3	1-4	1-5	1-6	1-7	1-8	1-9	1-10
DDRAMaddress	00	01	02	03	04	05	06	07	08	09
Display location	1-11	1-12	1-13	1-14	1-15	1-16	1-17	1-18	1-19	1-20
DDRAMaddress	0A	0B	0C	0D	0E	0F	10	11	12	13
Display location	1-21	1-22	1-23	1-24	1-25	1-26	1-27	1-28	1-29	1-30
DDRAMaddress	14	15	16	17	18	19	1A	1B	1C	1D
Display location	1-31	1-32	1-33	1-34	1-35	1-36	1-37	1-38	1-39	1-40
DDRAMaddress	1E	1F	20	twenty one	twenty two	twenty three	twenty four	25	26	27
Display location	2-1	2-2	2-3	2-4	2-5	2-6	2-7	2-8	2-9	2-10
DDRAMaddress	40	41	42	43	44	45	46	47	48	49
Display location	2-11	2-12	2-13	2-14	2-15	2-16	2-17	2-18	2-19	2-20
DDRAMaddress	4A	4B	4C	4D	4E	4F	50	51	52	53
Display location	2-21	2-22	2-23	2-24	2-25	2-26	2-27	2-28	2-29	2-30
DDRAMaddress	54	55	56	57	58	59	5A	5B	5C	5D
Display location	2-31	2-32	2-33	2-34	2-35	2-36	2-37	2-38	2-39	2-40
DDRAMaddress	5E	5F	60	61	62	63	64	65	66	67

1-1Indicates the first character of the first line.

8.Operation sequence

8.1 8BitMCUinterface

When the interface data width is set to8When the data is in bits, it comes from...8Bit port (DB0~DB7Simultaneous read and write, with the timing shown in the diagram below:

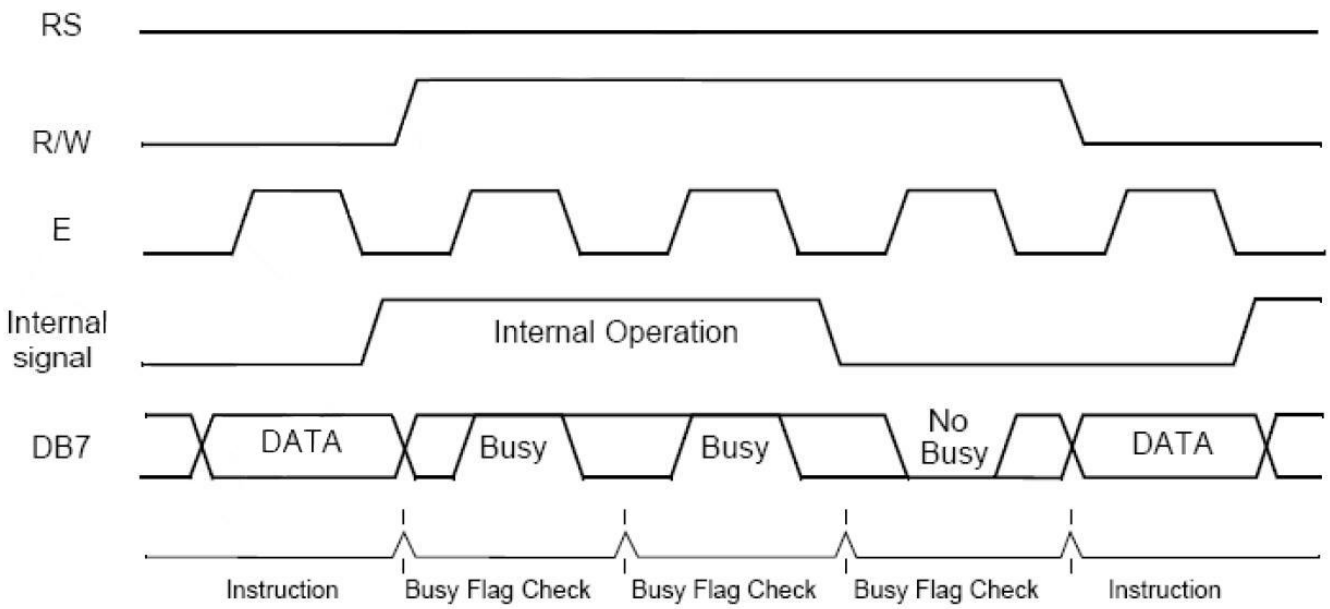

8.2 4BitMCUinterface

When the interface data width is set to4When the data is in bits, it only comes from...8High bit port4Bit(DB4~DB7To perform reading and writing, first transmit the high-order data.4 Bit retransmission low4The timing diagram is shown below:

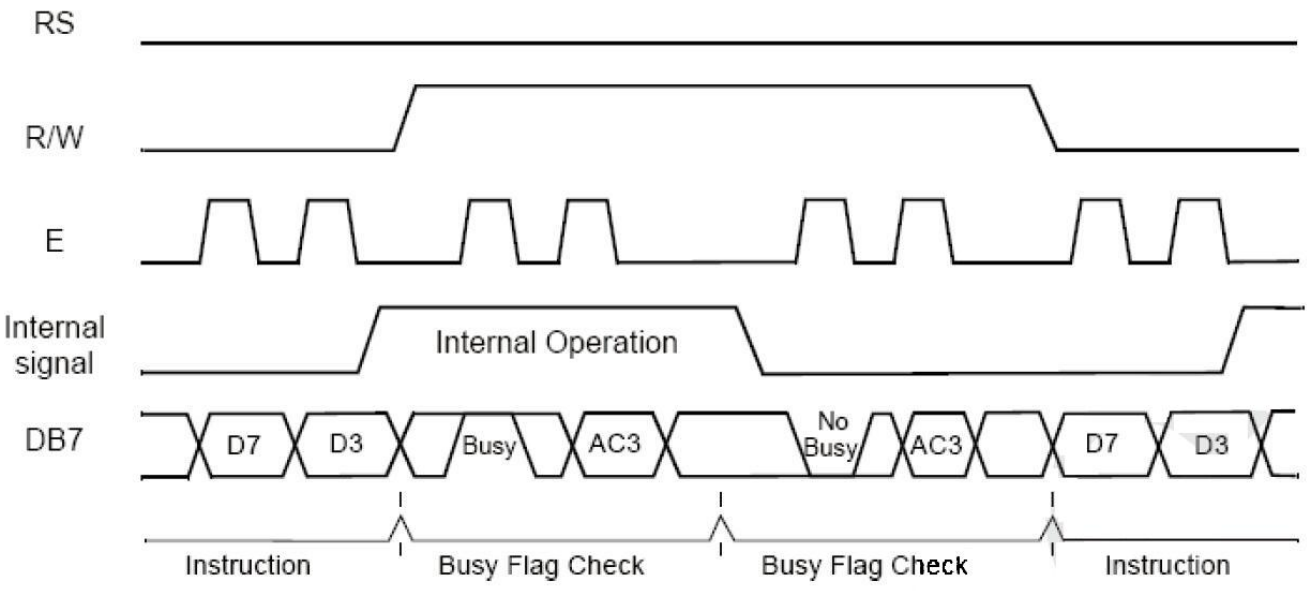

9.Application routines

9.1 8Wiring diagram

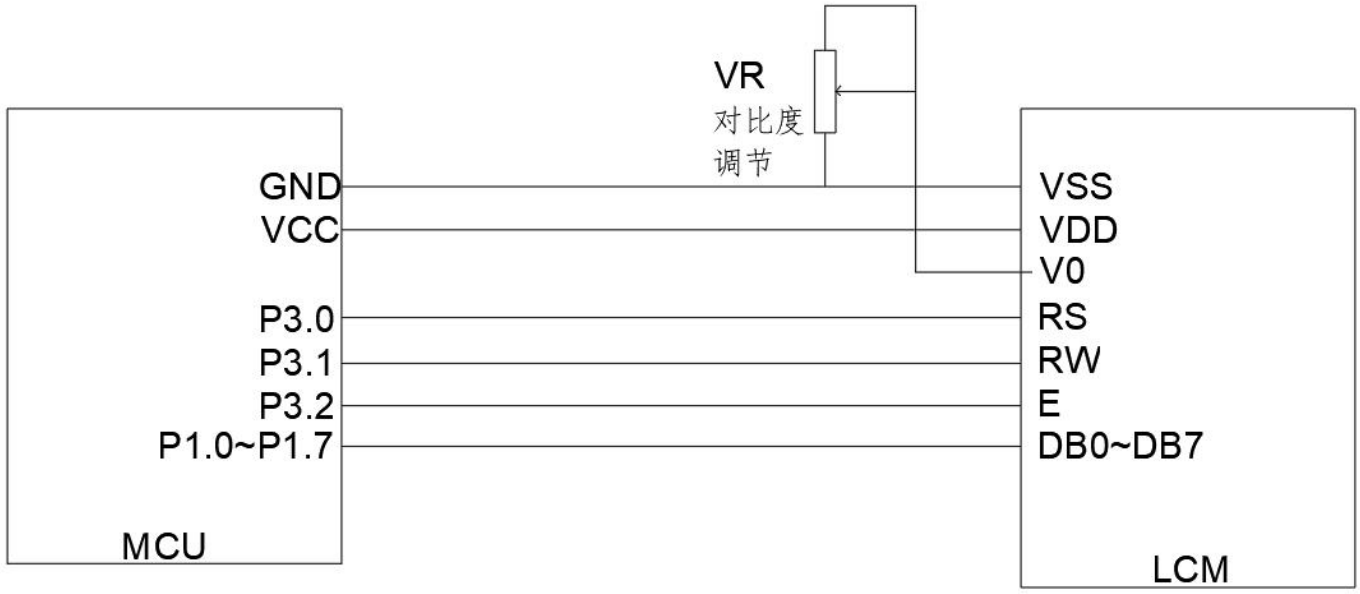

8位接线方法

9.2 8BitC51routine

```
#include <STC15.H>
#include <string.h>
#include <INTRINS.H>
# define uchar unsigned char
# define uint unsigned int
# define DB07 P1
sbit RS=P3^0;
sbit RW=P3^1;
sbit E=P3^2;

 ////////////////////////////////////////DBdistrict
uchar code border_inf[16] =
  { 0xaa,0x55,0xaa,0x55,0xaa,0x55,0xaa,0x55,
  0x55,0xaa,0x55,0xaa,0x55,0xaa,0x55,0xaa, };

uchar code string[]={
 0xa0,0xa1,0xa2,0xb0,0xb1,0xb2,0xc0,0xc1,0xc2,0xd0,0xd1,0xd2,0xe0,0xe1,0xe2,0xf0,
 0xf1,0xf2,0xa3,0xa4,0xa5,0xa6,0xb3,0xb4,0xb5,0xb6,0xc3,0xc4,0xc5,0xc6,0xd3,0xd4,
```

```
 0xd5,0xd6,0xe3,0xe4,0xe5,0xf3,0xf4,0xf5 };


void delay(unsigned int m)              //Delay program
        {
          unsigned int i,j;
          for(i=0;i<m;i++)
            for(j=0;j<20;j++);
        }

void delayms(unsigned int n)            //Delay10×nmillisecond program
        {
          unsigned int i,j;
          for(i=0;i<n;i++)
             {
            for(j=0;j<800;j++);
              }
        }

void LcdWriteCom(uchar com) {

    E=0;
    RW=0;
    RS=0;
    DB07=com;
    E=1;
  delay(10);
    E=0;

}

void LcdWriteData(uchar dat) {

    E=0;
    RW=0;
    RS=1;
    DB07=dat;
    E=1;
    delay(10);
```

```
    E=0;

}

void LcdInit()
{
    LcdWriteCom(0x38);
    LcdWriteCom(0x0c);
    LcdWriteCom(0x06);
    LcdWriteCom(0x01);
    delayms(5);
}

void Show_string1(uchar a[]) {

    uchar i;
    LcdWriteCom(0x80);
    for(i=0;a[i]!='\0';i++) {

      LcdWriteData(a[i]);
    }
}



void Show_string2(uchar *a) {

    uchar i;
    LcdWriteCom(0x80+0X40);
    for(i=0;i<8;i++)
    {
      LcdWriteData(a[i]);
    }
}

/*****************************************************************
* Name:Main()
* Function: Main function
* Input: None
```

```
* Output: None

*************************************************************************/

void main(void)
    {
                uchar i,j;
                LcdInit();
      LcdWriteCom(0x40);
         for(i=0;i<16;i++)
          {
           LcdWriteData(border_inf[i]); }

                while(1)
          {
                        for(j=0;j<2;j++)
       {
     LcdWriteCom(0x80);
     for(i=0;i<8;i++)
     {
       LcdWriteData(j);
     }
LcdWriteCom(0xC0);
     for(i=0;i<8;i++)
     {
       LcdWriteData(j);
     }
     delayms(500);
     }
  Show_string1("12345abc");
     Show_string2(string);
delayms(600);
       }
      }
```

9.3 4Wiring diagram

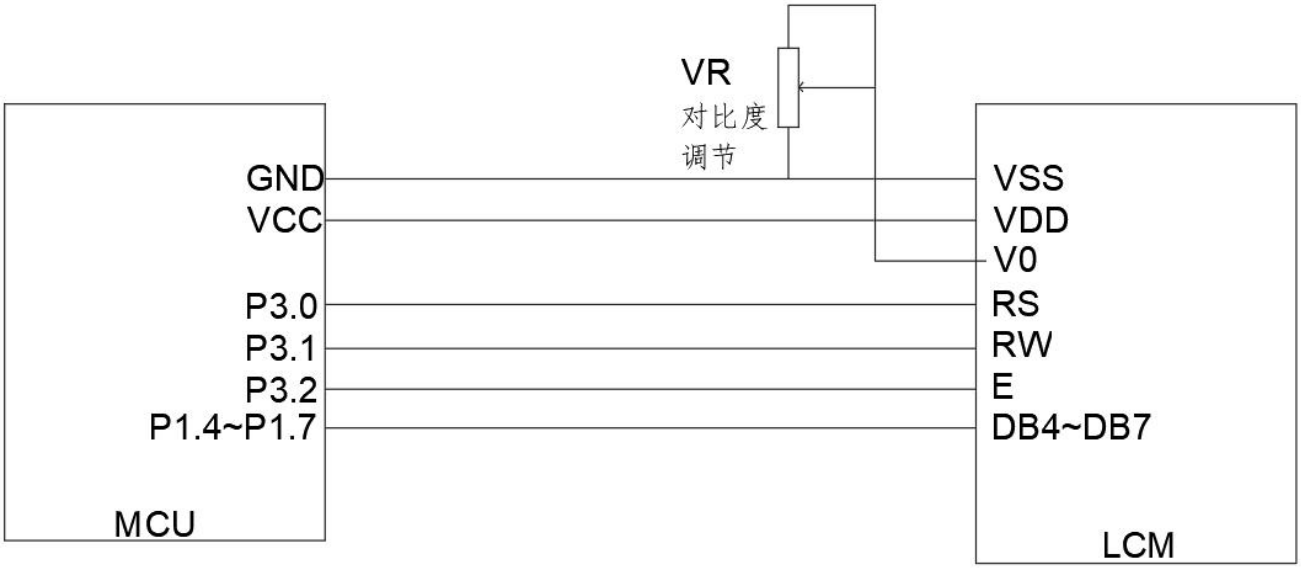

4位接线方法

9.4 4BitC51routine

```
#include <STC15.H>
#include <string.h>
#include <INTRINS.H>
# define uchar unsigned char
# define uint unsigned int
# define DB07 P1
sbit RS=P3^0;
sbit RW=P3^1;
sbit E=P3^2;

uchar code border_inf[16] =
  { 0xaa,0x55,0xaa,0x55,0xaa,0x55,0xaa,0x55,
  0x55,0xaa,0x55,0xaa,0x55,0xaa,0x55,0xaa, };



uchar code string[]={
 0xa0,0xa1,0xa2,0xb0,0xb1,0xb2,0xc0,0xc1,0xc2,0xd0,0xd1,0xd2,0xe0,0xe1,0xe2,0xf0,
```

```
 0xf1,0xf2,0xa3,0xa4,0xa5,0xa6,0xb3,0xb4,0xb5,0xb6,0xc3,0xc4,0xc5,0xc6,0xd3,0xd4,
 0xd5,0xd6,0xe3,0xe4,0xe5,0xf3,0xf4,0xf5
};

void delay(unsigned int m)              //Delay program
        {
          unsigned int i,j;
          for(i=0;i<m;i++)
            for(j=0;j<20;j++);
        }


void delayms(unsigned int n)            //Delay10×nmillisecond program
        {
          unsigned int i,j;
          for(i=0;i<n;i++)
             {
            for(j=0;j<800;j++);
              }
        }

void LcdWriteCom(uchar com) {

    uchar com1,com2;
    com1=com&0xf0;
    com2=(com<<4)&0xf0;
    E=0;
    RW=0;
    RS=0;
    DB07=com1;
    E=1;
  delay(10);
    E=0;
    RW=0;
    RS=0;
    DB07=com2;
    E=1;
  delay(10);
    E=0;
```

```
}

void LcdWriteData(uchar dat) {

    uchar dat1, dat2;
    dat1=dat&0xf0;
    dat2=(dat<<4)&0xf0;
    E=0;
    RW=0;
    RS=1;
    DB07=dat1;
    E=1;
  delay(10);
    E=0;
    RW=0;
    RS=1;
    DB07=dat2;
    E=1;
  delay(10);
    E=0;
}

void LcdInit()
{
    LcdWriteCom(0x28);
    LcdWriteCom(0x0c);
    LcdWriteCom(0x06);
    LcdWriteCom(0x01);
    delayms(5);
}

void Show_string1(uchar a[]) {

    uchar i;
    LcdWriteCom(0x80);
    for(i=0;a[i]!='\0';i++) {

       LcdWriteData(a[i]);
    }
}
```

```
void Show_string2(uchar *a) {

    uchar i;
    LcdWriteCom(0x80+0X40);
    for(i=0;i<8;i++)
    {
      LcdWriteData(a[i]);
    }
}

/*****************************************************************************
* Name:Main()
* Function: Main function
* Input: None
* Output: None
*****************************************************************************/

void main(void)
    {
                uchar i,j;
                LcdInit();
      LcdWriteCom(0x40);
        for(i=0;i<16;i++)
         {
          LcdWriteData(border_inf[i]); }

                while(1)
         {
                        for(j=0;j<2;j++)
       {
    LcdWriteCom(0x80);
    for(i=0;i<8;i++)
    {
      LcdWriteData(j);
    }
LcdWriteCom(0xC0);
    for(i=0;i<8;i++)
```

```
    {
      LcdWriteData(j);
    }
    delayms(500);
    }
  Show_string1("12345abc");
    Show_string2(string);
delayms(600);
      }
     }
```

9.5Font library

b7-b4 / b3-b0	0000	0001	0010	0011	0100	0101	0110	0111	1000	1001	1010	1011	1100	1101	1110	1111
0000	CG RAM (1)															
0001	(2)															
0010	(3)															
0011	(4)															
0100	(5)															
0101	(6)															
0110	(7)															
0111	(8)															
1000	(1)															
1001	(2)															
1010	(3)															
1011	(4)															
1100	(5)															
1101	(6)															
1110	(7)															
1111	(8)															

10.Precautions

1.LCD monitor (LCD)

Liquid crystal displays (LCDs) are composed of glass, organic sealant, organic fluid, and polymer-based polarizers. The following precautions should be taken during handling:1

Maintain the temperature within the range required for use and storage. Excessive temperature and humidity can cause polarization degradation, polarizer peeling, or bubbles.

(2Do not use comparison.HBHarder materials, like pencil lead, come into contact with the exposed polarizing filter. Remove dust from the monitor surface, gently with cotton.

Wipe, or soak a chamois cloth or other soft material in cleaning oil.

(3Wipe away saliva or water droplets immediately.ITOProlonged contact with water can cause the surface of an LCD monitor to deform or discolor.4Glass is easily shattered by rough handling, especially at corners and edges.5Do not use DC voltage to drive the LCD display.

2.LCD display module

2.1Mechanical Precautions

LCMThe assembly and adjustment are performed with high precision. Avoid excessive vibration and do not make any alterations or modifications. The following points should be noted:1Do not alter the lugs on the metal frame in any way.

(2Do not modify it by drilling additional holes, altering its outline, moving its components, or modifying its pattern.PCB. (3

Do not touch the elastomer connector, especially the part inserted into the backlight panel (e.g.,EL).

(4) .InstallLCMAt that time, please ensurePCBThe board is not subjected to any pressure, such as bending or twisting. The elastomer contact is extremely delicate, and even the slightest misalignment of any element can result in missing pixels.

(5Avoid pressing it against the metal baffle, otherwise the elastomer connector may deform and lose contact, resulting in pixel loss.

2.2.static electricity

LCMIncludeCMOS LSIThe same precautions should be taken for such equipment, namely...

(1When the operator is in contact with the module, it should be grounded. Never allow any part of the human body to touch any conductive parts, such as...LSIsolder padsPCB The copper wires and interface terminals on it.

(2The module should be stored in an anti-static bag or other anti-static container.3

Only use a properly grounded soldering iron.

(4If using an electric screwdriver, it should be properly grounded and commutator sparks should be prevented.

(5Work clothes and workbenches should adhere to standard anti-static measures; for the latter, the use of conductive (rubber) mats is recommended.6Because dry air can induce static electricity, a relative humidity of [value missing] is recommended.50-60%.

2.3.welding

(1Only welded toI/Oterminal.

(2Only soldering irons that are properly grounded and free of

leakage should be used.3Welding temperature:280℃±10℃ (4

Welding time:3arrive4Second. (5Low-temperature solder filled

with resin flux.

(6If flux is used, it should be covered.LCDApply protective coating to the surface to prevent flux splattering. Flux residue should be removed after application of protective coating.

2.4.operate

(1The viewing angle can be changed.LCDDrive voltageV0To adjust.

(2The driving voltage should be kept within the specified range; excessively high voltage will shorten the lifespan of the monitor.3The response time increases as the temperature decreases.

(4At temperatures above its operating range, the monitor may turn black or dark blue; this (but do not press on the display area) may cause some display lines to "break".

(5Mechanical damage during operation (such as pressing the display area) may cause the line segment to "break".

2.5.store

If liquid leaks from the damaged glass battery, wash any parts of the body that have come into contact with it with soap and water. Never swallow the liquid. The toxicity is extremely low, but caution should always be exercised.

2.6.Limited Warranty

Unless otherwise agreed with the customer, any electrical or cosmetic defects discovered during inspection according to acceptance criteria within one year from the date of shipment shall be repaired or rectified.LCDandICConfirmation of this date shall be based on the shipping documents, and warranty liability shall be limited to repairs and/or replacements performed in accordance with the foregoing terms. No liability shall be assumed for any subsequent or consequential events.